Chapter 3

OBJECT ORIENTED DATABASE

CONTENT

- Object-Relational Database
- Creating and querying object-relational databases

OBJECT - RELATIONAL DATABASE

Why Object database management systems (ODBMS)?

1. The need for storing and manipulating complex data is increasing. We can not use relational databases to store this kind of data.
2. The complex data types appear in several applications:
   - CAD/CAM
   - Geometric modeling
   - Geographical Information Systems
   - Knowledge-based systems / through frames
   - Web applications that need to store, index, search and manipulate diverse objects.
3. The impedance mismatch becomes apparent when trying to map these OO language properties to a RDBMS.

ODBMS, RDBMS and ORDBMS

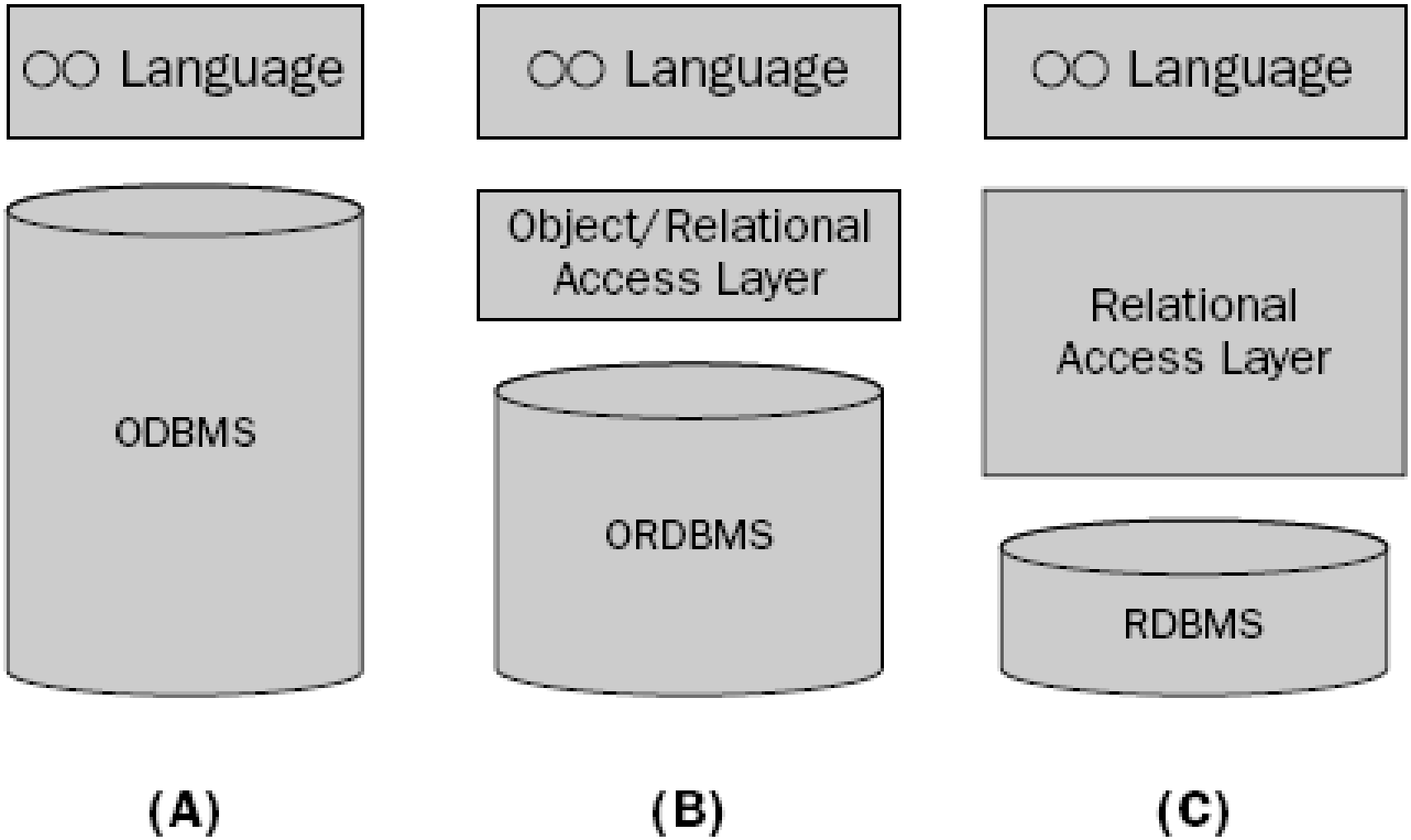

Creating and querying object-relational databases

Creating and querying object-relational databases

1. Create object
2. One simple example
3. How to create an object-relational database with the relational and object-oriented data models

CREATE OBJECT

```
CREATE OR REPLACE TYPE ObjectName AS OBJECT
(
   Attribute DataType, -- List of attritbute
   MEMBER FUNCTION FunctionName (Para List) return Datatype
-- List of Fucntion
);

CREATE OR REPLACE TYPE BODY FunctionName AS
   -- for each function, create content
   MEMBER FUNCTION FunctionName (Para List) return Datatype
     BEGIN
      .....
     END;
 END;
```

Creating and querying object-relational databases

1. Create object
2. One simple example
3. How to create an object-relational database with the relational and object-oriented data models

One simple example

1. Give an example of a geometric object in two-dimensional space.

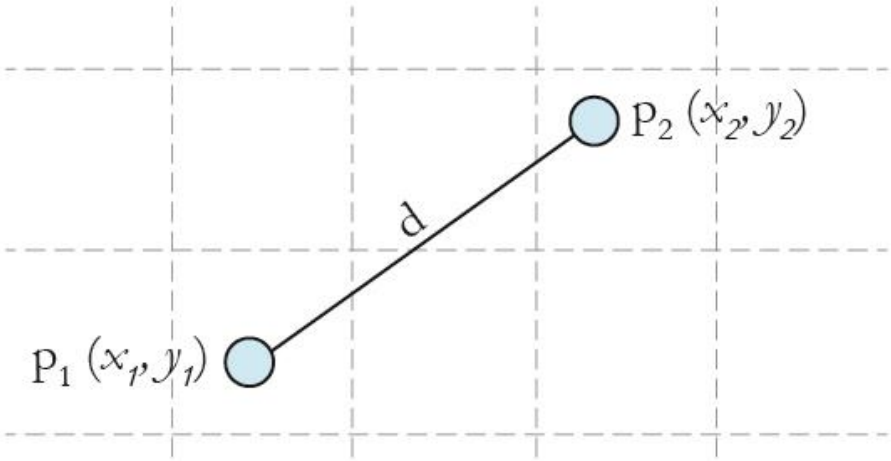

Euclidean distance (d) $= \sqrt{(x_2 - x_1)^2 + (y_2 - y_1)^2}$

2. With management requirements:
   - ✓ Point
   - ✓ Line, calculate the length of the line using the euclidean formula

One simple example

1. Create object named PointType

```
create or replace TYPE PointType AS OBJECT
(
   x number,
   y number
);
```

One simple example

2. Create LineType object

```
create or replace TYPE LineType AS OBJECT
(
   StartPoint PointType,
   EndPoint PointType,
   MEMBER FUNCTION Length return number,
   PRAGMA RESTRICT_REFERENCES (length, WNDS) --This clause
is necessary if we are to use length in queries.
);
```

One simple example

2. Create LineType object

BODY definition

```
create or replace TYPE BODY LineType AS
   MEMBER FUNCTION Length return number IS
      BEGIN
         return(sqrt((EndPoint.x-StartPoint.x)*(EndPoint.x-
StartPoint.x)+(EndPoint.y-StartPoint.y)*(EndPoint.y-
StartPoint.y)));
      END; -- end funct
END; -- end BODY
```

One simple example

3. Create table to store Lines

```
create table Lines
(
   lineID int,
   line LineType
);
```

4. Insert into Lines table

```
insert into lines values
(1, LineType(PointType(5,3), PointType(7,3)));
insert into lines values
(2, LineType(PointType(7,3), PointType(16,3)));
```

One simple example

4. Query:

SELECT * FROM lines;

	LINEID	LINE
1	1	[USER_B1.LINETYPE]
2	2	[USER_B1.LINETYPE]

SELECT lineid, ll.line.startpoint.x, ll.line.startpoint.y, ll.line.endpoint.x, ll.line.endpoint.y

FROM lines ll; -- have to use alias

	LINEID	LINE.STARTPOINT.X	LINE.STARTPOINT.Y	LINE.ENDPOINT.X	LINE.ENDPOINT.Y
1	1	5	3	7	3
2	2	7	3	16	3

One simple example

4. Query:

   SELECT * FROM lines;

   SELECT lineid, ll.line.Length() – function call needs to use ()

   FROM lines ll;

	LINEID	LL.LINE.LENGTH()
1	1	2
2	2	9

Creating and querying object-relational databases

1. Create object
2. One simple example
3. How to create an object-relational database with the relational and object-oriented data models

How to create an object-relational database with the relational and object-oriented data models

1. Object:

   OBJECT → TABLE OF OBJECT

2. Relationship:

   OBJECT references: collection type: varray or nested table

Create an object-relational database with relational data models

1. Create database
2. Insert / Delete / Update
3. Query

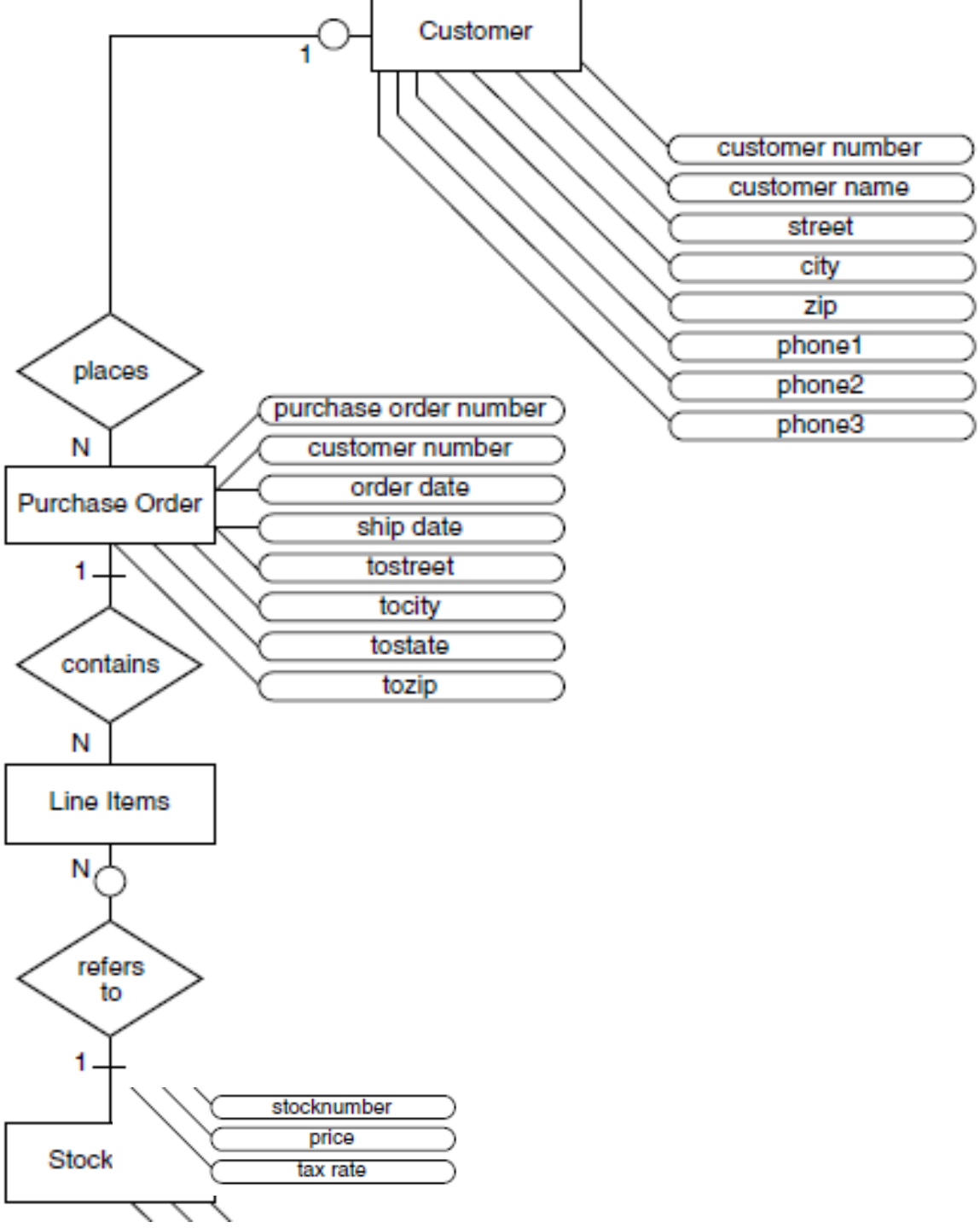
Customer
1
customer number
customer name
street
city
zip
phone1
phone2
phone3
places
N
Purchase Order
purchase order number
customer number
order date
ship date
tostreet
tocity
tostate
tozip
1
contains
N
Line Items
N
refers to
1
Stock
stocknumber
price
tax rate

Create an object-relational database with relational data models

Create

1. Customer → Customer_reltab
2. PurchaseOrder → PurchaseOrder_reltab
3. Stock → Stock_reltab
4. LineItems → LineItems_reltab

Create an object-relational database with relational data models

1. Customer → Customer_reltab

```
CREATE TABLE Customer_reltab (
        CustNo NUMBER NOT NULL,
        CustName VARCHAR2(200) NOT NULL,
        Street VARCHAR2(200) NOT NULL,
        City VARCHAR2(200) NOT NULL,
        State CHAR(2) NOT NULL,
        Zip VARCHAR2(20) NOT NULL,
        Phone1 VARCHAR2(20),
        Phone2 VARCHAR2(20),
        Phone3 VARCHAR2(20),
        PRIMARY KEY (CustNo)
);
```

Create an object-relational database with relational data models

2. PurchaseOrder → PurchaseOrder_reltab

```
CREATE TABLE PurchaseOrder_reltab (
        PONo NUMBER,
        Custno NUMBER references Customer_reltab, /* Foreign
KEY referencing customer */
        OrderDate DATE,
        ShipDate DATE,
        ToStreet VARCHAR2(200),
        ToCity VARCHAR2(200),
        ToState CHAR(2),
        ToZip VARCHAR2(20),
        PRIMARY KEY(PONo)
);
```

Create an object-relational database with relational data models

3. Stock → Stock_reltab

```
CREATE TABLE Stock_reltab (
        StockNo NUMBER PRIMARY KEY,
        Price NUMBER,
        TaxRate NUMBER
);
```

Create an object-relational database with relational data models

4. LineItems → LineItems_reltab

```
CREATE TABLE LineItems_reltab (
        LineItemNo NUMBER,
        PONo     NUMBER     REFERENCES     PurchaseOrder_reltab,
        StockNo NUMBER REFERENCES Stock_reltab,
        Quantity NUMBER,
        Discount NUMBER,
        PRIMARY KEY (PONo, LineItemNo)
);
```

Create an object-relational database with relational data models

Insert

1. Insert data into Customer_reltab

INSERT INTO Customer_reltab VALUES (1, 'Jean Nance', '2 Avocet Drive', 'Redwood Shores', 'CA', '95054', '415-555-0102', NULL, NULL);

INSERT INTO Customer_reltab VALUES (2, 'John Nike', '323 College Drive', 'Edison', 'NJ', '08820', '609-555-0190', '201-555-0140', NULL);

Create an object-relational database with relational data models

2. Insert data into PurchaseOrder_reltab

```
INSERT INTO PurchaseOrder_reltab VALUES (1001, 1, SYSDATE, '10-MAY-1997', NULL, NULL, NULL, NULL);

INSERT INTO PurchaseOrder_reltab VALUES (2001, 2, SYSDATE, '20-MAY-1997', '55 Madison Ave', 'Madison', 'WI', '53715');
```

Create an object-relational database with relational data models

3. Insert data into Stock_reltab

```
INSERT INTO Stock_reltab VALUES(1004, 6750.00, 2);
INSERT INTO Stock_reltab VALUES(1011, 4500.23, 2);
INSERT INTO Stock_reltab VALUES(1534, 2234.00, 2);
INSERT INTO Stock_reltab VALUES(1535, 3456.23, 2);
```

Create an object-relational database with relational data models

4. Insert data into LineItems_reltab

```
INSERT INTO LineItems_reltab VALUES(01, 1001, 1534, 12, 0);

INSERT INTO LineItems_reltab VALUES(02, 1001, 1535, 10, 10);

INSERT INTO LineItems_reltab VALUES(01, 2001, 1004, 1, 0);

INSERT INTO LineItems_reltab VALUES(02, 2001, 1011, 2, 1);
```

Create an object-relational database with relational data models

Query

1. Select customer information and purchase details of the order invoice having code '1001'

```
SELECT C.CustNo, C.CustName, C.Street, C.City, C.State, C.Zip, C.phone1, C.phone2, C.phone3, P.PONo, P.OrderDate, L.StockNo, L.LineItemNo, L.Quantity, L.Discount

FROM Customer_reltab C, PurchaseOrder_reltab P, LineItems_reltab L

WHERE C.CustNo = P.CustNo AND P.PONo = L.PONo AND P.PONo = 1001;
```

Create an object-relational database with relational data models

Query

2. Get the Value of each invoice

```
SELECT P.PONo, SUM(S.Price * L.Quantity)

FROM PurchaseOrder_reltab P, LineItems_reltab L, Stock_reltab S

WHERE P.PONo = L.PONo AND L.StockNo = S.StockNo

GROUP BY P.PONo;
```

Create an object-relational database with object-oriented models

1. Create database
2. Insert / Delete / Update
3. Query

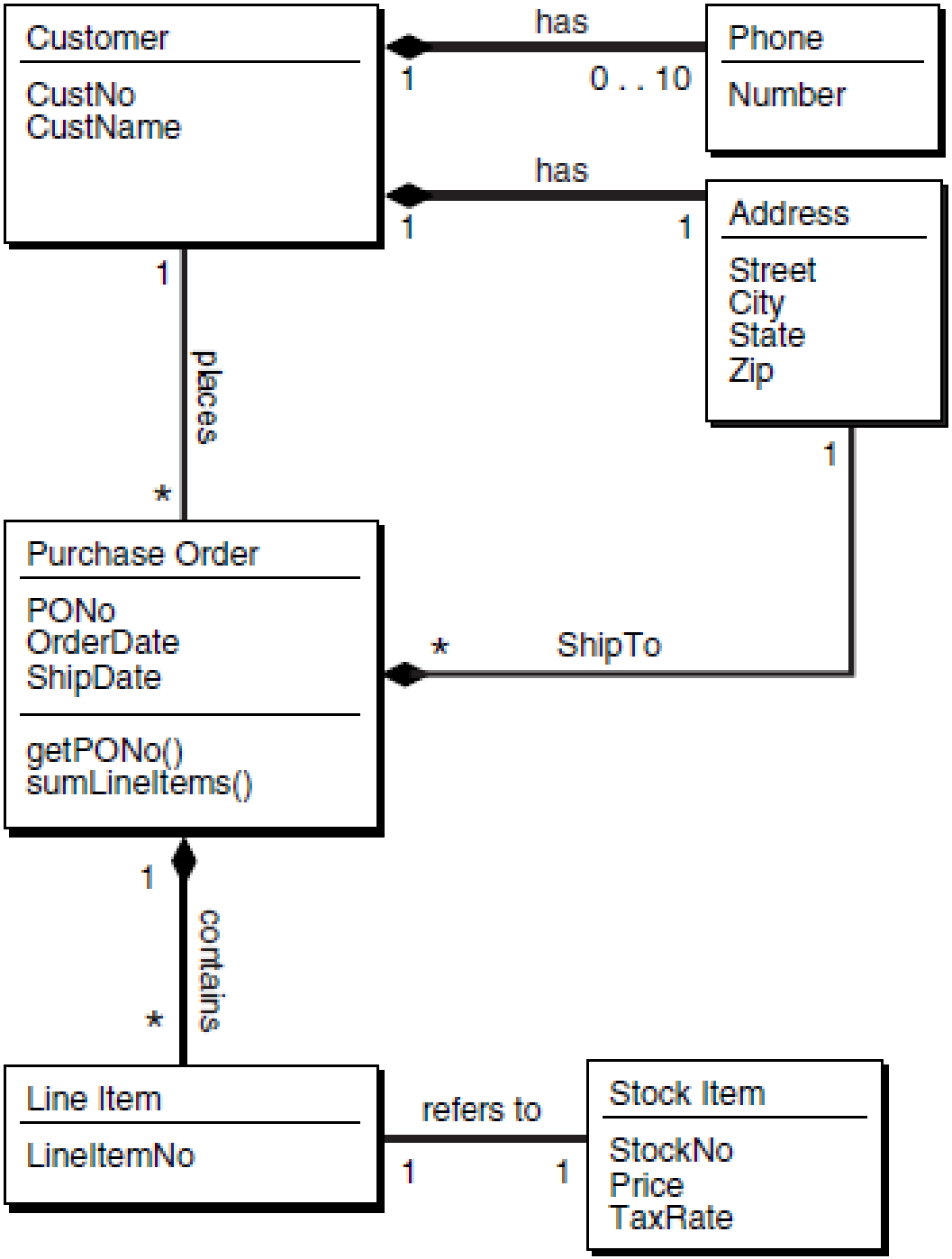
Customer
CustNo
CustName
has
1
0 . . 10
Phone
Number
has
1
1
Address
Street
City
State
Zip
1
places
*
1
Purchase Order
PONo
OrderDate
ShipDate
getPONo()
sumLineItems()
*
ShipTo
1
contains
*
Line Item
LineItemNo
refers to
1
1
Stock Item
StockNo
Price
TaxRate

Create an object-relational database with object-oriented models

Create:

Create object, varray

1. StockItem → StockItem_objtyp
2. LineItem → LineItem_objtyp
3. Address → Address_objtyp
4. PhoneList_vartyp
5. Customer → Customer_objtyp
6. LineItemList_ntabtyp
7. PurchaseOrder → PurchaseOrder_objtyp

Create an object-relational database with object-oriented models

Create object

1. StockItem → StockItem_objtyp

```
CREATE OR REPLACE TYPE StockItem_objtyp AS OBJECT (
  StockNo NUMBER,
  Price NUMBER,
  TaxRate NUMBER
  );
```

Create an object-relational database with object-oriented models

Create object

2. LineItem → LineItem_objtyp

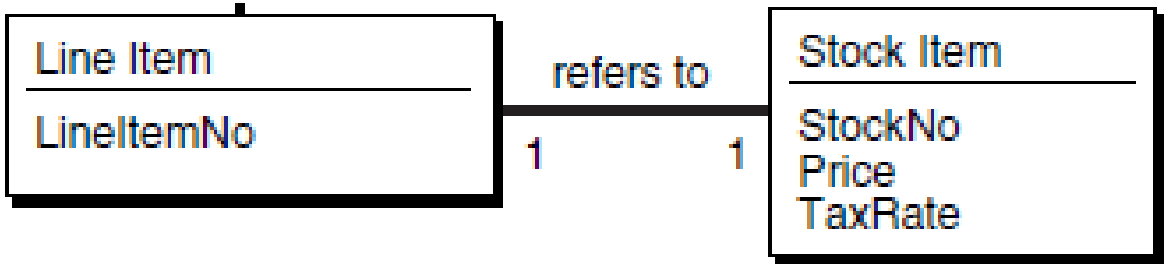


```
CREATE OR REPLACE TYPE LineItem_objtyp AS OBJECT (
  LineItemNo NUMBER,
  Stock_ref REF StockItem_objtyp,
  Quantity NUMBER,
  Discount NUMBER
);
```

Create an object-relational database with object-oriented models

Create object

3. Address → Address_objtyp

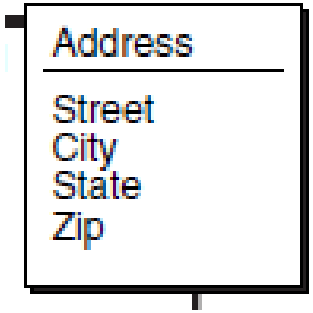


```
CREATE OR REPLACE TYPE Address_objtyp AS OBJECT (
  Street VARCHAR2(200),
  City VARCHAR2(200),
  State CHAR(2),
  Zip VARCHAR2(20)
);
```

Create an object-relational database with object-oriented models

Create object

4. PhoneList_vartyp

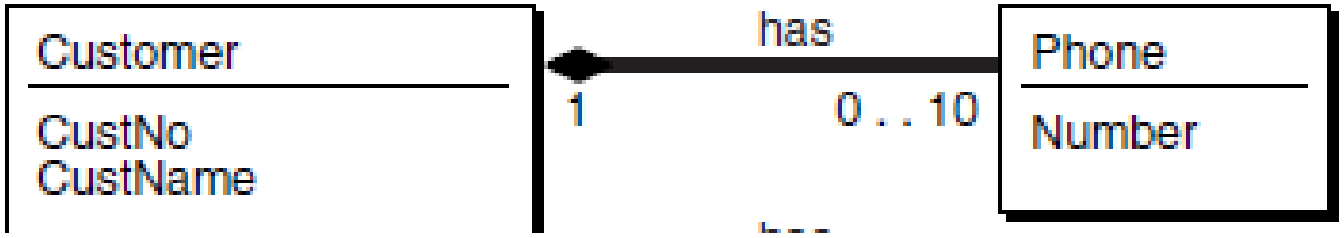


```
CREATE OR REPLACE TYPE PhoneList_vartyp AS
VARRAY(10) of varchar2(15);
```

Create an object-relational database with object-oriented models

Create object

5. Customer → Customer_objtyp

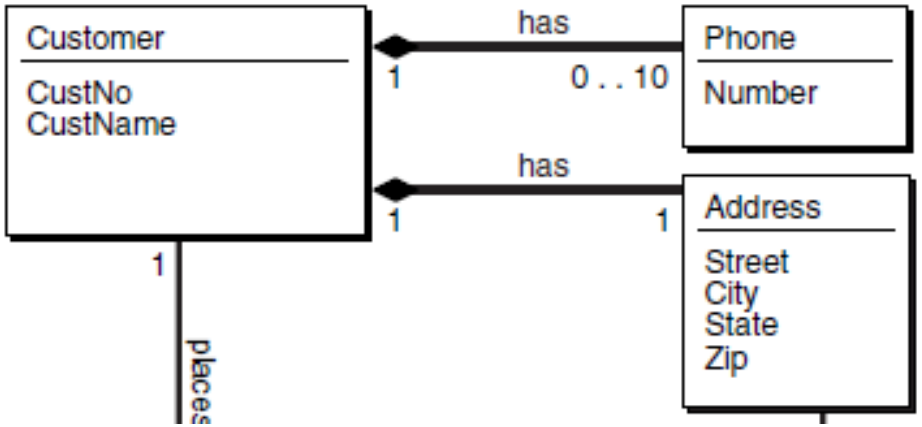


```
CREATE OR REPLACE TYPE Customer_objtyp AS OBJECT (
  CustNo NUMBER,
  CustName VARCHAR2(200),
  Address_obj Address_objtyp,
  PhoneList_var PhoneList_vartyp,
  ORDER MEMBER FUNCTION compareCustOrders (x IN
Customer_objtyp) RETURN INTEGER
) NOT FINAL;
```

Create an object-relational database with object-oriented models

Create object

6. LineItemList_ntabtyp

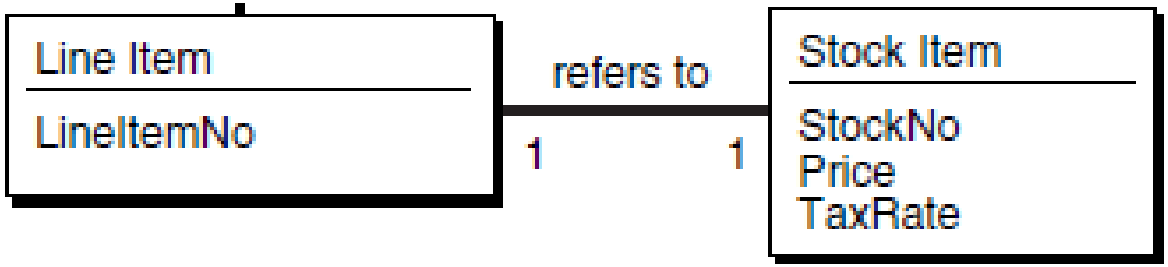


```
CREATE OR REPLACE TYPE LineItemList_ntabtyp AS
TABLE OF LineItem_objtyp;
```

Create an object-relational database with object-oriented models

Create object

7. PurchaseOrder

→ PurchaseOrder_objtyp

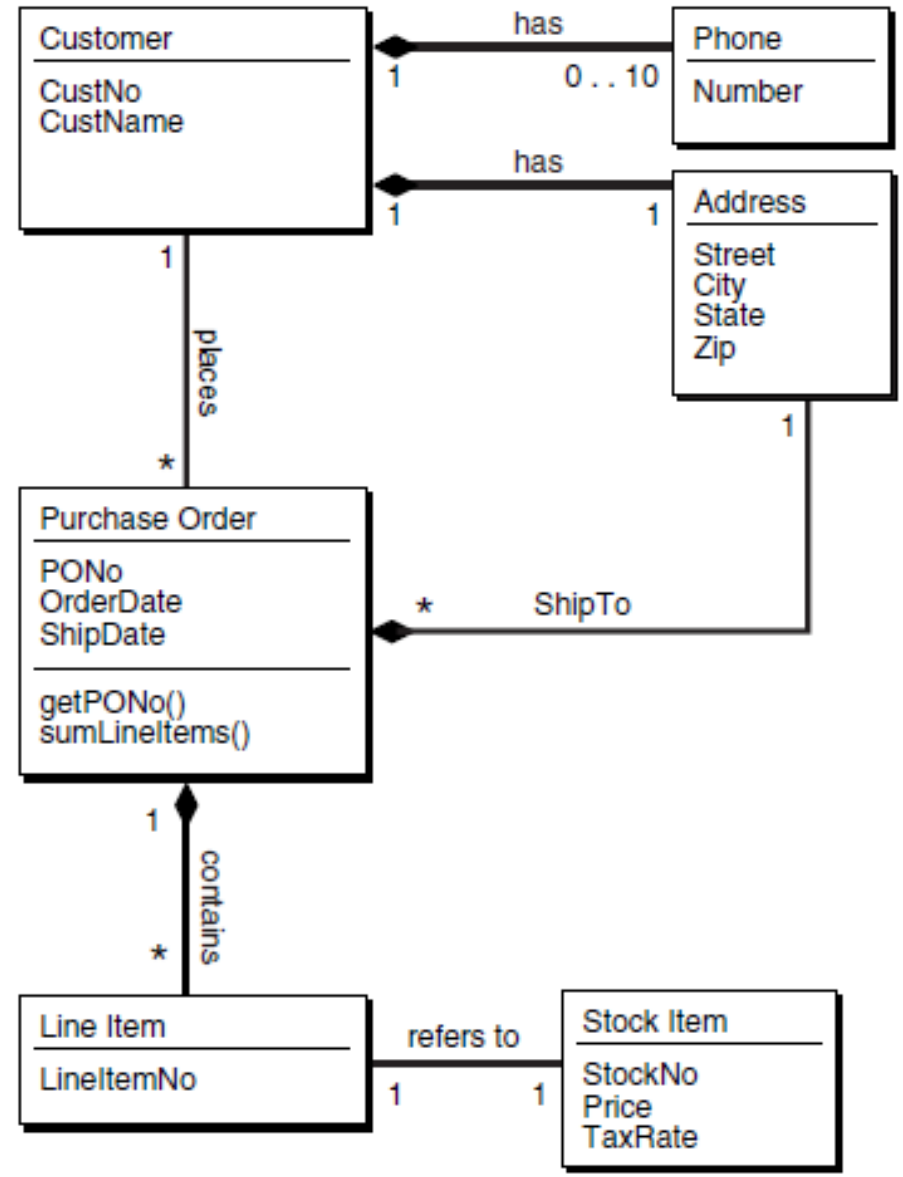

Create an object-relational database with object-oriented models

Create object

7. PurchaseOrder → PurchaseOrder_objtyp

```
CREATE OR REPLACE TYPE PurchaseOrder_objtyp AUTHID CURRENT_USER AS OBJECT (
  PONo NUMBER,
  Cust_ref REF Customer_objtyp,
  OrderDate DATE,
  ShipDate DATE,
  LineItemList_ntab LineItemList_ntabtyp,
  ShipToAddr_obj Address_objtyp,
  MAP MEMBER FUNCTION getPONo RETURN NUMBER,
  MEMBER FUNCTION sumLineItems RETURN NUMBER
);
```

Create an object-relational database with object-oriented models

Create object: add body definition

```
CREATE OR REPLACE TYPE BODY PurchaseOrder_objtyp AS
  MAP MEMBER FUNCTION getPONo RETURN NUMBER is
     BEGIN
        RETURN PONo;
     END; -- getPONo

  MEMBER FUNCTION sumLineItems RETURN NUMBER AS
    i INTEGER;
    StockVal StockItem_objtyp;
    Total NUMBER := 0;
    BEGIN
      FOR i in 1..SELF.LineItemList_ntab.COUNT
      LOOP
        UTL_REF.SELECT_OBJECT(LineItemList_ntab(i).Stock_ref, StockVal);
        Total := Total + SELF.LineItemList_ntab(i).Quantity * StockVal.Price;
      END LOOP;
    RETURN Total;
  END; -- sumLineItems
END; -- BODY
```

Create an object-relational database with object-oriented models

Create object: add body definition

```
CREATE OR REPLACE TYPE BODY Customer_objtyp AS
 ORDER MEMBER FUNCTION compareCustOrders (x IN Customer_objtyp) RETURN
INTEGER IS
   BEGIN
     RETURN CustNo - x.CustNo;
   END;
END;
```

Create an object-relational database with object-oriented models

Create TABLE to store data

1. StockItem_objtyp → Stock_objtab
2. Customer_objtyp → Customer_objtab
3. PurchaseOrderobjtyp → PurchaseOrder_objtab

Create an object-relational database with object-oriented models

Create TABLE to store data

1. StockItem_objtyp → Stock_objtab

```
CREATE TABLE Stock_objtab OF StockItem_objtyp
(StockNo PRIMARY KEY)
OBJECT IDENTIFIER IS PRIMARY KEY;
```

Create an object-relational database with object-oriented models

Create TABLE to store data

2. Customer_objtyp → Customer_objtab

```
CREATE TABLE Customer_objtab OF Customer_objtyp
(
   CustNo PRIMARY KEY
)
OBJECT IDENTIFIER IS PRIMARY KEY;
```

Create an object-relational database with object-oriented models

Create TABLE to store data

3. PurchaseOrderobjtyp → PurchaseOrder_objtab

```
CREATE TABLE PurchaseOrder_objtab OF PurchaseOrder_objtyp
(
  PRIMARY KEY (PONo),
  FOREIGN KEY (Cust_ref) REFERENCES Customer_objtab)
  OBJECT IDENTIFIER IS PRIMARY KEY

NESTED TABLE LineItemList_ntab STORE AS PoLine_ntab
((PRIMARY KEY (NESTED_TABLE_ID, LineItemNo))
ORGANIZATION INDEX COMPRESS )
  RETURN AS LOCATOR

ALTER TABLE PoLine_ntab
ADD (SCOPE FOR (Stock_ref) IS stock_objtab) ;
```

Figure A–4 Object Relational Representation of Table PurchaseOrder_objtab

Table PURCHASEORDER_OBJTAB (of PURCHASEORDER_OBJTYP)

PONO	CUST_REF	ORDERDATE	SHIPDATE	LINEITEMLIST_NTAB	SHIPTOADDR_OBJ
Number NUMBER	Reference CUSTOMER_ OBJTYP	Date DATE	Date DATE	Nested Table LINEITEMLIST_ NTABTYP	Object Type ADDRESS_ OBJTYP
PK	FK				

MEMBER FUNCTION getPONO RETURN NUMBER
MEMBER FUNCTION SumLineItems RETURN NUMBER

Reference to a row of the table

Table CUSTOMER_OBJTAB (of CUSTOMER_OBJTYP)

CUSTNO	CUSTNAME	ADDRESS_OBJ	PHONELIST_VAR
Number NUMBER	Text VARCHAR2(200)	Object Type ADDRESS_OBJTYP	Varray PHONELIST_VARTYP
PK			

Figure A–5 Object Relational Representation of Nested Table LineItemList_ntab

Column LINEITEMLIST_NTAB (of LINEITEMLIST_NTABTYP (as table of LINEITEM_OBJTYP))

LINEITEMNO	STOCK_REF	QUANTITY	DISCOUNT
Number NUMBER	Reference STOCKITEM_OBJTYP	Number NUMBER	Number NUMBER

Refers to a row of the table

Table STOCK_OBJTAB (of STOCKITEM_OBJTYP)

STOCKNO	PRICE	TAXRATE
Number NUMBER	Number NUMBER	Number NUMBER
PK		

Figure A–6 Object Relational Representation of Table PurchaseOrder_objtab

Table PURCHASEORDER_OBJTAB (of PURCHASEORDER_OBJTYP)

PONO	CUST_REF	ORDERDATE	SHIPDATE	LINEITEMLIST_NTAB	SHIPTOADDR_OBJ
Number NUMBER	Reference CUSTOMER_ OBJTYP	Date DATE	Date DATE	Nested Table LINEITEMLIST_ NTABTYP	Object Type ADDRESS_ OBJTYP
PK	FK				

MEMBER FUNCTION getPONO RETURN NUMBER
MEMBER FUNCTION SumLineItems RETURNNUMBER

Column Object
of the defined type

Column Object SHIPTOADDR_OBJ (of ADDR_OBJTYP)

STREET	CITY	STATE	ZIP
Text VARCHAR2(200)	Text VARCHAR2(200)	Text CHAR(2)	Number VARCHAR2(20)

Create an object-relational database with object-oriented models

Insert data

1. Insert into Stock_objtab and query

```
INSERT INTO Stock_objtab VALUES(1004, 6750.00, 2) ;
INSERT INTO Stock_objtab VALUES(1011, 4500.23, 2) ;
INSERT INTO Stock_objtab VALUES(1534, 2234.00, 2) ;
INSERT INTO Stock_objtab VALUES(1535, 3456.23, 2) ;
```

```
SELECT * FROM Stock_objtab;
```

	STOCKNO	PRICE	TAXRATE
1	1004	6750	2
2	1011	4500.23	2
3	1534	2234	2
4	1535	3456.23	2

Create an object-relational database with object-oriented models

Insert data

2. Insert into Customer_objtab and query

INSERT INTO Customer_objtab VALUES (1, 'Jean Nance', Address_objtyp ('2 Avocet Drive', 'Redwood Shores', 'CA', '95054'), PhoneList_vartyp ('415-555-0102')) ;

INSERT INTO Customer_objtab VALUES (2, 'John Nike', Address_objtyp ('323 College Drive', 'Edison', 'NJ', '08820'), PhoneList_vartyp ('609-555-0190','201-555-0140')) ;

SELECT * FROM Customer_objtab;

	CUSTNO	CUSTNAME	ADDRESS_OBJ	PHONELIST_VAR
1	1	Jean Nance	[USER_B1.ADDRESS_OBJTYP]	USER_B1.PHONELIST_VARTYP('415-555-0102')
2	2	John Nike	[USER_B1.ADDRESS_OBJTYP]	USER_B1.PHONELIST_VARTYP('609-555-0190','201-555-0140')

Create an object-relational database with object-oriented models

Insert data

2. Insert into Customer_objtab and query

```
SELECT C.CustNo, C.CustName, C.Address_obj.Street,
C.Address_obj.City, C.Address_obj.State, C.PhoneList_var
FROM Customer_objtab C;
```

	CUSTNO	CUSTNAME	ADDRESS_OBJ.STREET	ADDRESS_OBJ.CITY	ADDRESS_OBJ.STATE	PHONELIST_VAR
1	1	Jean Nance	2 Avocet Drive	Redwood Shores	CA	USER_B1.PHONELIST_VARTYP('415-555-0102')
2	2	John Nike	323 College Drive	Edison	NJ	USER_B1.PHONELIST_VARTYP('609-555-0190','201-555-0140')

Create an object-relational database with object-oriented models

Insert data

3. Insert into PurchaseOrder_objtab and query

```
INSERT INTO PurchaseOrder_objtab
SELECT 1001, REF(C), SYSDATE, '10-MAY-1999',
LineItemList_ntabtyp(), NULL
FROM Customer_objtab C
WHERE C.CustNo = 1 ;
```

TỔ CHỨC VÀ TRUY VẤN CSDL QUAN HỆ ĐỐI TƯỢNG TỪ CSDL HƯỚNG ĐỐI TƯỢNG

3. Insert into PurchaseOrder_objtab and query

Chèn dữ liệu cho LineItemList_ntabtyp

INSERT INTO TABLE (SELECT P.LineItemList_ntab FROM PurchaseOrder_objtab P WHERE P.PONo = 1001)
SELECT 01, REF(S), 12, 0 FROM Stock_objtab S WHERE S.StockNo = 1534 ;

INSERT INTO TABLE (SELECT P.LineItemList_ntab FROM PurchaseOrder_objtab P WHERE P.PONo = 1001)
SELECT 02, REF(S), 10, 10 FROM Stock_objtab S WHERE S.StockNo = 1535 ;

Create an object-relational database with object-oriented models

3. Insert into PurchaseOrder_objtab and query

Tương tự chèn thêm 1 dòng dữ liệu cho PurchaseOrder_objtab

```
INSERT INTO PurchaseOrder_objtab
SELECT 2001, REF(C), SYSDATE, '20-MAY-1997',
LineItemList_ntabtyp (), Address_objtyp ('55 Madison
Ave','Madison','WI','53715')
FROM Customer_objtab C WHERE C.CustNo = 2 ;
```

Create an object-relational database with object-oriented models

3. Insert into PurchaseOrder_objtab

```
INSERT INTO TABLE (SELECT P.LineItemList_ntab
  FROM PurchaseOrder_objtab P
  WHERE P.PONo = 2001)
  SELECT 10, REF(S), 1, 0 FROM Stock_objtab S
  WHERE S.StockNo = 1004 ;

INSERT INTO TABLE ( SELECT P.LineItemList_ntab
  FROM PurchaseOrder_objtab P
  WHERE P.PONo = 2001)
  VALUES (11, (SELECT REF(S) FROM Stock_objtab S
  WHERE S.StockNo = 1011), 2, 1) ;
```

Create an object-relational database with object-oriented models

Query

Ex1: List all attributes

SELECT * FROM PurchaseOrder_objtab;

	PONO	CUST_REF	ORDERDATE	SHIPDATE	LINEITEMLIST_NTAB	SHIPTOADDR_OBJ
1	1001	[USER_B1.CUSTOMER_OBJTYP]	06-MAY-17	10-MAY-99	USER_B1.LINEITEMLIST_NTABTYP([USER_B1.LINEITEM_OBJTYP])	(null)
2	2001	[USER_B1.CUSTOMER_OBJTYP]	06-MAY-17	20-MAY-97	USER_B1.LINEITEMLIST_NTABTYP([USER_B1.LINEITEM_OBJTYP],[USER_B1.LINEITEM_OBJTYP])	[USER_B1.ADDRESS_OBJTYP]

→ ???

Create an object-relational database with object-oriented models

Query

Ex2: select PONo

```
SELECT p.PONo
FROM PurchaseOrder_objtab p
```

	PONO
1	1001
2	2001

Create an object-relational database with object-oriented models

Ex3: Find Customer and LineItem Data for Purchase Order 1001

```
SELECT p.Cust_ref, p.ShipToAddr_obj, p.PONo, p.OrderDate, LineItemList_ntab
FROM PurchaseOrder_objtab p
WHERE p.PONo = 1001 ;
```

	CUST_REF	SHIPTOADDR_OBJ	PONO	ORDERDATE	LINEITEMLIST_NTAB
1	[USER_B1.CUSTOMER_OBJTYP]	(null)	1001	06-MAY-17	USER_B1.LINEITEMLIST_NTABTYP([USER_B1.LINEITEM_OBJTYP])

Create an object-relational database with object-oriented models

Ex4: Select CustNo, CustName for Purchase Order 1001

```
SELECT p.Cust_ref.CustNo, p.Cust_ref.CustName, p.PONo
FROM PurchaseOrder_objtab p
WHERE p.PONo = 1001 ;
```

	CUST_REF.CUSTNO	CUST_REF.CUSTNAME	PONO
1	1	Jean Nance	1001

Create an object-relational database with object-oriented models

Ex5: Sum of each Purchase Order

```
SELECT p.PONo, p.sumLineItems()
FROM PurchaseOrder_objtab p ;
```

	PONO	P.SUMLINEITEMS()
1	1001	61370.3
2	2001	15750.46

Create an object-relational database with object-oriented models

Ex6: Select PONo, CustNo and list of item ordered

```
SELECT po.PONo, po.Cust_ref.CustNo, L.*
FROM PurchaseOrder_objtab po, TABLE (po.LineItemList_ntab) L
```

	PONO	CUST_REF.CUSTNO	LINEITEMNO	STOCK_REF	QUANTITY	DISCOUNT
1	2001	2	10	[USER_B1.STOCKITEM_OBJTYP]	1	0
2	2001	2	11	[USER_B1.STOCKITEM_OBJTYP]	2	1
3	1001	1	1	[USER_B1.STOCKITEM_OBJTYP]	12	0
4	1001	1	2	[USER_B1.STOCKITEM_OBJTYP]	10	10

Create an object-relational database with object-oriented models

Ex7: Select PONo, CustNo, and StockNo ordered

```
SELECT po.PONo, po.Cust_ref.CustNo, L.LineItemNo,
L.Stock_ref.StockNo, L.Quantity
FROM PurchaseOrder_objtab po, TABLE (po.LineItemList_ntab) L
```

	PONO	CUST_REF.CUSTNO	LINEITEMNO	STOCK_REF.STOCKNO	QUANTITY
1	2001	2	10	1004	1
2	2001	2	11	1011	2
3	1001	1	1	1534	12
4	1001	1	2	1535	10

Create an object-relational database with object-oriented models

Ex8: Delete Purchase Order 1001

```
DELETE FROM PurchaseOrder_objtab WHERE PONo = 1001 ;
```

Create an object-relational database with object-oriented models

Figure A–7 Nested Tables in the Customer Object Type

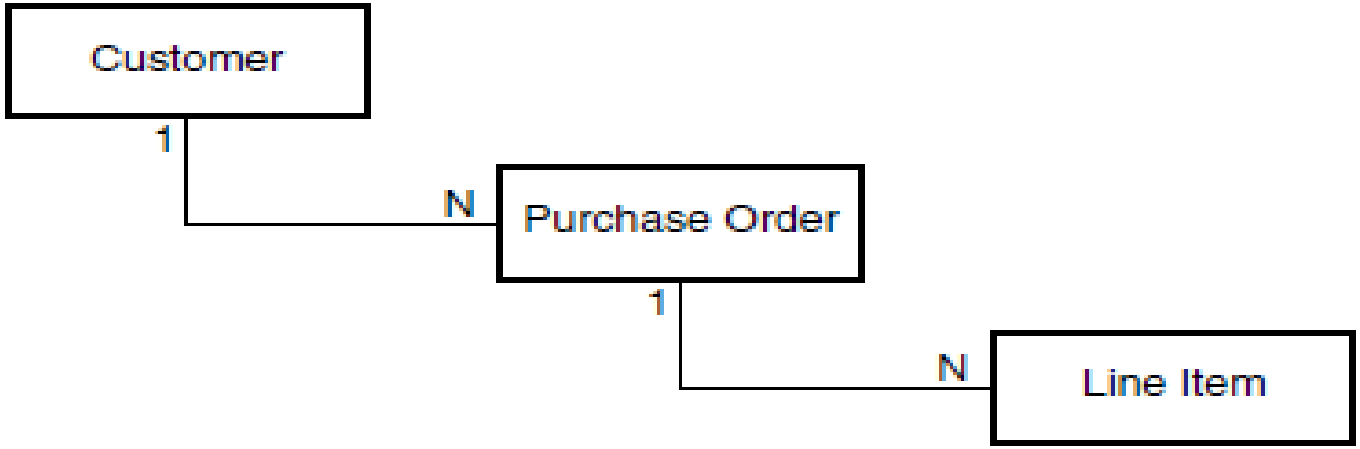

Add PurchaseOrderList_ntabtyp attribute for Customer_objtyp

```
CREATE TYPE PurchaseOrderList_ntabtyp AS TABLE OF PurchaseOrder_objtyp;
ALTER TYPE Customer_objtyp
ADD ATTRIBUTE (PurchaseOrderList_ntab PurchaseOrderList_ntabtyp)
CASCADE;
```

Create an object-relational database with object-oriented models

Show information of nested-tables

SELECT table_name, parent_table_name, parent_table_column FROM user_nested_tables;

	TABLE_NAME	PARENT_TABLE_NAME	PARENT_TABLE_COLUMN
1	SYSNTmnTYt7WQRsuWSOhs4H3HCw==	CUSTOMER_OBJTAB	PURCHASEORDERLIST_NTAB
2	POLINE_NTAB	PURCHASEORDER_OBJTAB	LINEITEMLIST_NTAB
3	SYSNTEzD2iAqvQEKzcXYFUloZxg==	SYSNTmnTYt7WQRsuWSOhs4H3HCw==	LINEITEMLIST_NTAB

For convenience, rename the names automatically set by the system.

ALTER TABLE "SYSNTmnTYt7WQRsuWSOhs4H3HCw==" RENAME TO PO_List_nt;

ALTER TABLE "SYSNTEzD2iAqvQEKzcXYFUloZxg==" RENAME TO Items_List_nt;

	TABLE_NAME	PARENT_TABLE_NAME	PARENT_TABLE_COLUMN
1	PO_LIST_NT	CUSTOMER_OBJTAB	PURCHASEORDERLIST_NTAB
2	ITEMS_LIST_NT	PO_LIST_NT	LINEITEMLIST_NTAB
3	POLINE_NTAB	PURCHASEORDER_OBJTAB	LINEITEMLIST_NTAB

Reference: ebook: Sample Application Using Object-Relational Features –Page 219

Link
https://docs.oracle.com/cd/E11882_01/appdev.112/e11822/adobjxmp.htm#ADOBJ009